Buffer Type A

MEGA-T

Article No.	D mm	H mm	STOCK Thread M: GXL (mm) 0	1	SPECIAL OFFER Thread M: GXL (mm) 2	3	4	5	6	7	8	9
500 001	6	6			3 × 6							
500 002	6	7			3 × 6							
500 003	8	6			3 × 6							
500 004	8	8			3 × 6							
500 005	9	12			4 × 6							
500 006	10	8			4 × 10							
500 007	10	10	4 × 10		4 × 10							
500 008	10	15			4 × 10							
500 009	12	24			4 × 12							
500 010	13	26			4 × 10							
500 011	15	6			4 × 6			13				
500 012	15	8			4 × 6			13				
500 013	15	10			4 × 6			13				
500 014	15	15	4 × 13		4 × 6			13				
500 015	15	20			4 × 6			13				
500 016	15	25			4 × 6			13				
500 017	15	28			4 × 6			13				
500 018	15	30			4 × 6			13				
500 019	18	8,5	6 × 16		6 × 10	16						
500 020	20	10			6 ×			15	18			
500 021	20	15	6 × 15		6 ×			15	18			
500 022	20	20	6 × 15		6 ×			15	18			
500 023	20	25	6 × 15		6 ×			15	18			
500 024	20	30			6 ×			15	18			
500 025	25	10			6 ×			15	18			
500 026	25	15	6 × 18		6 ×			15	18			
500 027	25	20	6 × 18		6 ×			15	18			
500 028	25	25			6 ×			15	18			
500 029	25	30			6 ×			15	18			
500 030	30	15	8 x 20		8 ×	10		16		20	23	
500 031	30	20	8 x 20		8 ×	10		16		20	23	
500 082	30	22			8 ×	10		16		20	23	
500 032	30	25			8 ×	10		16		20	23	
500 033	30	30	8 x 20		8 ×	10		16		20	23	
500 081	30	35			8 ×	10		16		20	23	
500 034	30	40										
500 035	30	50										
500 036	40	20			8 × 13		23					
500 080	40	25	8 x 23		8 × 13		23					
500 037	40	30	8 x 23		8 × 13		23					
500 038	40	40			8 × 13		23					
500 039	40	66*										
500 040	50	20	10 × 28		10 ×	20	28	33				
500 041	50	25			10 ×	20	28	33				
500 042	50	30	10 × 28		10 ×	20	28	33				
500 043	50	35			10 ×	20	28	33				
500 044	50	40	10 × 28		10 ×	20	28	33				
500 045	50	45			10 ×	20	28	33				
500 046	50	50	10 × 28		10 ×	20	28	33				
500 047	50	55										

This articles are in stocks only in NR, 55 shore A

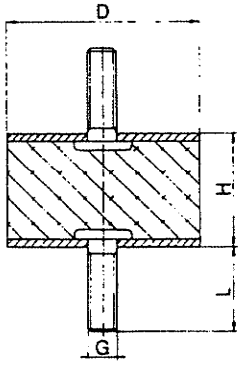

Buffer Type A

MEGA-T

Article No.	D mm	H mm	STOCK Thread M: G × L (mm)
			0
500 048	60	35	
500 049	60	40	
500 050	60	45	
500 051	70	35	
500 052	70	45	10 × 30
500 053	75	25	
500 054	75	40	12 × 37
500 055	75	45	
500 056	75	50	12 × 37
500 057	75	55	12 × 37
500 058	75	60	
500 059	80	66	
500 060	90	50	
500 061	90	55	
500 062	100	30	
500 063	100	40	
500 064	100	50	
500 065	100	55	16 × 45
500 066	100	60	
500 067	100	75	
500 068	100	100	
500 069	125	55	
500 070	125	60	
500 071	150	55	
500 072	150	60	
500 073	150	75	
500 074	150	100	
500 075	160	75	
500 076	200	100	

SPECIAL OFFER				
Metal Ø	Thread M: G × L (mm)			
	1	2	3	4
50	10 ×	20	28	33
50	10 ×	20	28	33
50	10 ×	20	28	33
	10 ×	30		
	10 ×	30		
	12 ×	37		
	12 ×	37		
	12 ×	37		
	12 ×	37		
	12 ×	37		
	12 ×	37		
75	12 × 37			
	14 × 33			
	14 × 33			
	16 × 45			
	16 × 45			
	16 × 45			
	16 × 45			
	16 × 45			
	16 × 45			
	16 × 45			
	16 × 45			
	16 × 45			
	16 × 45	20 × 45		
	16 × 45	20 × 45		
	16 × 45	20 × 45		
	16 × 45	20 × 45		
	16 × 45			
	20 × 45			

These articles are in stock only in NR, 55 shore A

Elastomer: Natural Rubber
soft = 40 ± 5 Shore A
medium = 55 ± 5 Shore A
hard = 70 ± 5 Shore A

PROCESS TOLERANCES
COMPLY WITH DIN 7715 CLASS M3/C

Buffer Type B

MEGA-T

Article No.	D mm	H mm	STOCK Thread M: GXL (mm) 0	1
510 001	6	6		
510 002	6	7		
510 003	8	6		
510 004	8	8		
510 005	9	12		
510 006	10	10	4 × 10	
510 007	10	15		
510 008	12	24		
510 009	13	26		
510 010	15	10		
510 011	15	15	4 × 13	
510 012	15	20		
510 013	15	25		
510 014	15	28		
510 015	15	30		
510 016	20	15	6 × 15	
510 017	20	20	6 × 15	
510 018	20	25	6 × 15	
510 019	20	30		
510 020	25	15		
510 021	25	20	6 × 18	
510 022	25	25		
510 023	25	30		
510 024	**30**	**15**	**8 x 20**	
510 025	**30**	**20**	**8 x 20**	
510 026	**30**	**25**		
510 027	**30**	**30**		
510 071	**30**	**35**	**8 x 20**	
510 028	**30**	**40**		
510 029	**30**	**50**		
510 030	40	20		
510 031	40	30	8 × 23	
510 032	40	40	8 × 23	
510 033	40	66		
510 034	50	20	10 × 28	
510 035	50	25		
510 036	50	30	10 × 28	
510 037	50	35		
510 038	50	40	10 × 28	
510 039	50	45		
510 040	50	50	10 × 28	
510 041	50	55		
510 042	60	35		
510 043	60	40		
510 044	60	45		
510 045	70	35		
510 046	70	45	10 × 30	

These articles are in stock only in NR, 55 shore A

SPECIAL OFFER								
Metal Ø	Thread M: G × L (mm)							
	2	3	4	5	6	7	8	9
	3 × 6							
	3 × 6							
	3 × 6							
	3 × 6							
	4 × 10							
	4 × 10							
	4 × 12							
	4 × 10	12						
	4 × 6			13				
	4 × 6			13				
	4 × 6			13				
	4 × 6			13				
	4 × 6			13				
	4 × 6			13				
	6 ×	10		15	18			
	6 ×	10		15	18			
	6 ×	10		15	18			
	6 ×	10		15	18			
	6 ×	10		15	18			
	6 ×	10		15	18			
	6 ×	10		15	18			
	6 ×	10		15	18			
	8 ×	10		16		20	23	
	8 ×	10		16		20	23	
	8 ×	10		16		20	23	
	8 ×	10		16		20	23	
	8 ×	10		16		20	23	
	8 ×	10		16		20	23	
	8 × 13		23	28				
	8 × 13		23	28				
	8 × 13		23	28				
	8 × 13		23	28				
	10 ×	20	28	33				
	10 ×	20	28	33				
	10 ×	20	28	33				
	10 ×	20	28	33				
	10 ×	20	28	33				
	10 ×	20	28	33				
	10 ×	20	28	33				
	10 ×	20	28	33				
50	10 ×	20	28	33				
50	10 ×	20	28	33				
50	10 ×	20	28	33				
	10 ×	30						
	10 ×	30						

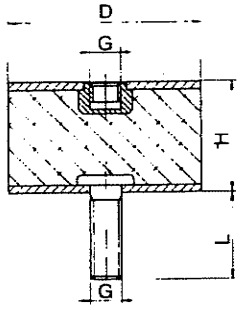

Buffer Type B

MEGA-T

Article No.	D mm	H mm	STOCK Thread M: G × L (mm)	SPECIAL OFFER Metal Ø	Thread M: G × L (mm) 1	Thread M: G × L (mm) 2
			0		1	2
510 047	75	25			12 ×	37
510 048	75	40	12 × 37		12 ×	37
510 049	75	45			12 ×	37
510 050	75	50	12 × 37		12 ×	37
510 051	75	55	12 × 37		12 ×	37
510 052	75	60			12 ×	37
510 053	80	66		75	12 ×	37
510 054	100	30			16 × 45	
510 055	100	40			16 × 45	
510 056	100	50			16 × 45	
510 057	100	55	16 × 45		16 × 45	
510 058	100	60			16 × 45	
510 059	100	75			16 × 45	
510 060	100	100			16 × 45	
510 061	125	55			16 × 45	
510 062	125	60			16 × 45	
510 063	150	55			16 × 45	20 × 45
510 064	150	60			16 × 45	20 × 45
510 065	150	75			16 × 45	20 × 45
510 066	150	100			16 × 45	20 × 45
510 067	160	75			16 × 45	
510 068	200	100			20 × 45	
510 069	90	50			14 × 33	
510 070	90	55			14 × 33	

Elastomer: Natural Rubber
soft = 40 ± 5 Shore A
medium = 55 ± 5 Shore A
hard = 70 ± 5 Shore A

PROCESS TOLERANCES
COMPLY WITH DIN 7715 CLASS M3/C

Buffer Type C

MEGA-T

Article No.	D, mm	H mm	STOCK Thread M: GXL (mm)	SPECIAL OFFER Metal Ø	SPECIAL OFFER Thread M: GXL (mm)
			0		1
520 001	8	8			3
520 002	9	12			4
520 003	10	10	4		4
520 004	10	15			4
520 005	12	24			4
520 006	13	26			4
520 007	15	15	4		4
520 008	15	20			4
520 009	15	25			4
520 010	15	28			4
520 011	15	30			4
520 012	**20**	**20**	**6**		6
520 082	**20**	**23**			6
520 013	**20**	**25**			6
520 014	**20**	**30**			
520 015	25	20	6		6
520 016	25	25			6
520 017	25	30	6		6
520 018	**30**	**20**	**8**		8
520 019	**30**	**25**			8
520 020	**30**	**30**	**8**		8
520 081	**30**	**35**			8
520 021	**30**	**40**			8
520 022	**30**	**50**			
520 023	40	30	8		8
520 024	40	40	8		8
520 025	40	66			8
520 026	50	30	10		10
520 027	50	35			10
520 028	50	40	10		10
520 029	50	45			10
520 030	50	50	10		10
520 031	50	55			10
520 032	60	35		50	10
520 033	60	40		50	10
520 034	60	45		50	10
520 035	70	35			10
520 036	70	45	10		10

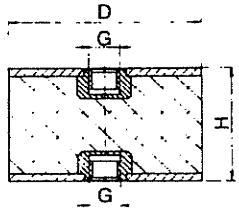

Buffer Type C

MEGA-T

Article No.	D mm	H mm	STOCK Thread M: G (mm)
			0
520 037	75	40	12
520 038	75	45	
520 039	75	50	12
520 040	75	55	12
520 041	75	60	
520 080	75	75	
520 042	80	66	
520 043	90	50	
520 044	90	55	
520 045	100	40	
520 046	100	50	
520 047	100	55	16
520 048	100	60	
520 049	100	75	
520 050	100	100	
520 051	125	55	
520 052	125	60	
520 053	150	55	
520 054	150	60	
520 055	150	75	
520 056	150	100	
520 057	160	75	
520 058	200	100	

SPECIAL OFFER		
Metal Ø	Thread M: G (mm)	
	1	2
	12	
	12	
	12	
	12	
	12	
75	12	
	14	
	14	
	16	
	16	
	16	
	16	
	16	
	16	
	16	
	16	
	16	20
	16	20
	16	20
	16	20
	16	
	16	20

These articles are in stock only in NR, 55 shore A
In the case of Special Fabrication: Quality as Required

Elastomer: Natural Rubber
soft = 40 ± 5 Shore A
medium = 55 ± 5 Shore A
hard = 70 ±5 Shore A

PROCESS TOLERANCES
COMPLY WITH DIN 7715 CLASS M3/C

Buffer Type D

MEGA-T

Article No.	D mm	H mm	STOCK Thread M: GXL (mm)
			0
530 001	6	6	
530 002	6	7	
530 003	7	6	
530 004	8	8	
530 005	10	10	4 × 10
530 006	10	15	
530 007	12	8	
530 008	12	13	
530 009	12	13,5	
530 010	13	26	
530 011	15	6	
530 012	15	8	
530 013	15	13	
530 014	15	15	
530 015	15	18	
530 016	15	28	
530 017	18	7,5	6 × 16
530 018	20	5	
530 019	20	12	
530 020	20	13,5	
530 021	20	15	6 × 15*
530 022	20	20	
530 023	20	23	
530 024	20	25	
530 025	25	5	
530 026	25	6	
530 027	25	8	
530 028	25	13	
530 029	25	15	
530 030	25	17	6 X 18
530 031	25	20	
530 032	25	25	
530 033	25	28	
530 090	25	30	
530 034	30	5.5	
530 035	30	10	
530 036	30	15	
530 037	30	17	8 X 20*
530 038	30	20	8 X 20*
530 039	30	25	
530 040	30	28	
530 041	30	30	
530 042	30	40	
530 089	30	50	
530 043	30	55	
530 081	35	18	

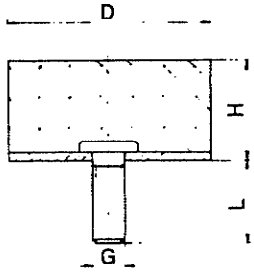

Article No.	D mm	H mm	STOCK Threas M: GXL (mm)
			0
530 044	40	5	
530 045	40	6	
530 046	40	10	
530 047	40	15	
530 048	40	18	
530 049	40	20	
530 092	40	25	
530 050	40	28	
530 051	40	38	8 X 23
530 052	40	40	
530 091	50	40	
530053	40	50	
530 082	50	13	
530083	50	13	D50 X 8
530 054	50	17	
530 055	50	21	10 X 28
530 086	50	25	
530 056	50	28	
530 057	50	36	
530 091	50	40	
530 058	50	42	
530 059	50	45	
530 060	70	42	
530 061	70	45	
530 062	75	15	
530 085	75	20	
530 063	75	25	12 X 37
530 064	75	36	
530 084	75	40	
530 065	75	51	
530 066	80	40	
530 087	100	22	
530 067	100	35	
530 068	100	40	
530 069	100	50	
530 080	100	55	
530 070	100	100	
530 071	125	38	
530 072	125	60	
530 073	150	40	
530 074	150	45	
530 075	150	75	
530 076	160	30	
530 077	160	47	
530 078	200	100	
530 079	250	48	

These articles are in stock only in NR, 55 shore A
In the case of Special Fabrication: Quality as Required

Elastomer: Natural Rubber
soft = 40±5 Shore A
medium = 55±5 Shore A
hard = 70 ±5 Shore A

PROCESS TOLERANCES
COMPLY WITH DIN 7715 CLASS M3/C

Buffer Type E

MEGA-T

Article No.	D mm	H mm	STOCK Thread M: G (mm)
			0
540 001	6	6	
540 002	6	7	
540 003	7	6	
540 004	8	8	
540 005	10	10	
540 006	10	15	
540 007	12	13	
540 008	12	13,5	
540 009	13	26	
540 010	15	13	
540 011	15	15	
540 012	15	18	
540 013	15	28	
540 014	20	12	
540 015	20	13,5	
540 016	20	15	
540 017	20	20	
540 018	20	23	
540 019	20	25	
540 020	25	13	
540 021	25	15	
540 022	25	17	
540 023	25	20	
540 024	25	25	
540 025	25	28	
540 026	30	15	
540 027	30	17	8
540 028	30	20	8
540 029	30	25	
540 030	30	28	
540 031	30	30	
540 032	30	40	
540 033	30	55	
540 034	40	15	
540 035	40	18	
540 036	40	20	
540 037	40	28	8
540 038	40	38	
540 039	40	40	
540 040	40	50	
540 041	50	17	
540 042	50	21	10
540 043	50	27	
540 044	50	36	
540 045	50	42	
540 046	50	45	

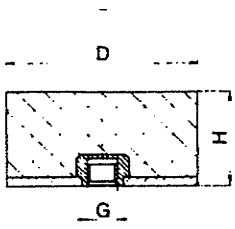

Article No.	D mm	H mm	STOCK Thread M: G (mm)
			0
540 047	70	42	
540 048	70	45	
540 049	75	25	
540 050	75	36	
540 051	75	51	
540 052	80	40	
540 053	100	35	
540 054	100	40	
540 055	100	50	
540 056	100	100	
540 057	125	38	
540 058	125	60	
540 059	150	40	
540 060	150	45	
540 061	150	75	
540 062	160	30	
540 063	160	47	
540 064	200	100	
540 065	250	48	

Buffer Type KS/E

SPECIAL			
Article No.	D mm	H mm	Thread G (mm)
			0
556 001	15	20	4
556 002	25	15	6
556 003	25	28	6

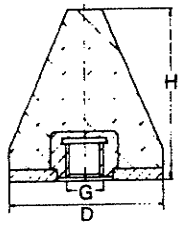

These articles are in stock only in NR, 55 shore A

Elastomer: Natural Rubber
soft = 40 ± 5 Shore A
medium = 55 ± 5 Shore A
hard = 70 ± 5 Shore A

PROCESS TOLERANCES
COMPLY WITH DIN 7715 CLASS M3/C

IS Element

SPECIAL		
	Article No.	Thread
❶	151 001 151 002	6
❷	151 003 151 004	8
❸	151 005 151 006	10
❹	151 007 151 008	12
❺	151 009 151 010	16
❻	151 011 151 012	16
❼	151 013 151 014	8

	A	B	L	D	d	G	t	H	h
❶	49,5	60		58	5,2	M 6	20	28	18
❷	61	77	-	58	9	M 8	20	28	18
❸	63,5	76		76	6,4	M 10	30	38	25
❹	74	90		76	9	M 12	30	38	25
❺	108	133		124	11,9	M 16	19	63	38
❻	143	175		168	13,5	M 16	65	90	59
❼	86	70	106	58	9	M 8	20	28	18

❶ 151 001/002
❷ 151 003/004
❸ 151 005/006
❹ 151 007/008

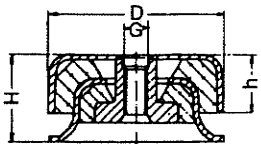

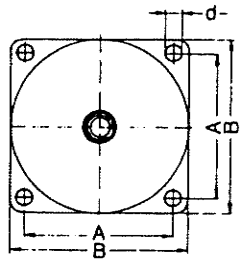

❺ 151 009/010
❻ 151 011/012

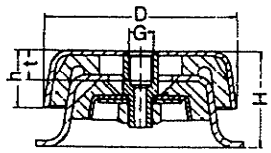

❼ 151 013/014

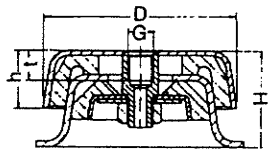

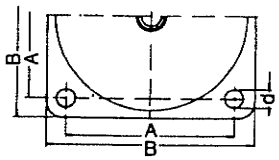

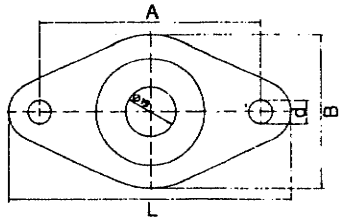

Elastomer:
Choloroprene-Rubber
Shore Hardness:
40, 50, 60, 70 Shore A±3

Other available elastomers as:
- Silicone-Elastomer
- HD- damp-Elastomer

Other shore hardness according to request

MF-Element

SPECIAL											
Article No.	a_1	a_2	b_1	b_2	d_1	d_1	d_2	d_3	d_4	h_1	Fig
155 001	25,4	32	25,4	32	5,1		18	25,4	3,6	19,8	1
155 002	25,4	32	25,4	32		M 5	18	25,4	3,6	19,8	1
155 003	28	36	28	36	5,1		20	29,5	3,1	19,8	1
155 004	28	36	28	36		M 5	20	29,5	3.1	19,8	1
155 005	35,8	46		30	5,1		20	25,4	4,6	19,8	2
155 006	35,8	46		30		M 5	20	25,4	4,6	19,8	2
155 007	35,8	45,5		28,8	5,1		20	25	4,6	19,8	3
155 008	35,8	45,5		28,8		M 4	20	25	4,6	19,8	3
155 009	35,8	44,5		31,7	5,1		20	27	5,1	25,5	4
155 010	35,8	44,5		31,7		M 4	20	27	5,1	25,5	4
155 011	35	44,8	35	44,8	6,6		34,6	38	4,3	26	5
155 012	35	44,8	35	44,8		M 8	34,6	38	4,3	26	5
155 013	35	44,8	35	44,8	6,6		29	38	4,8	26	6
155 014	35	44,8	35	44,8		M 8	29	38	4,8	26	6
155 015	49,5	61	49,5	61	6,6		34,6	54	6,2	34	7
155 016	49,5	61	49,5	61		M 8	34,6	54	6,2	34	7
155 017	35,8	45,5		28,8	5,1		20	25	4,6	19,8	3
155 018	34,9	44,8	34,9	44,8	6,7		29	38,7	4,8	25,4	1

Elastomer:
Standard Performance:

SI: Silicone:
temperature range:
-55°c to 150°c

NBR: Oil Resistance:
Shore hardness:
40, 50, 60 shore A

CR: Chloroprene Rubber:
temperature range:
-25°c to 80°c

FIG 1

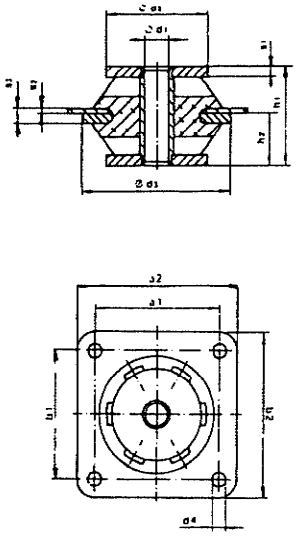

FIG 2

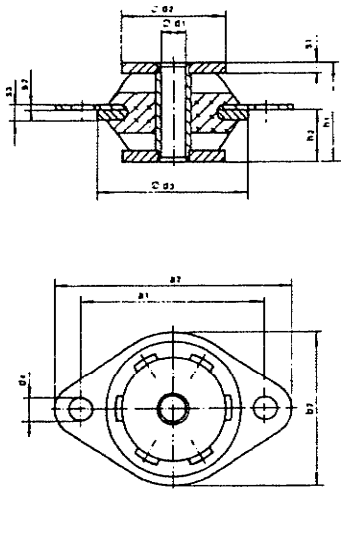

MF-Element

FIG 3

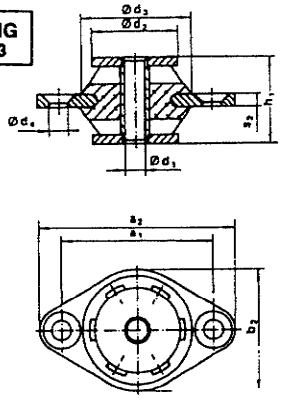

FIG 4

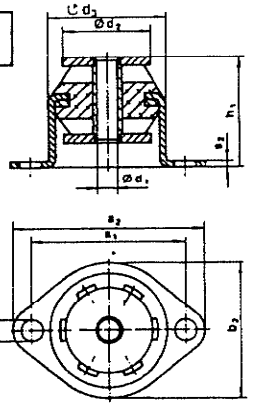

FIG 5

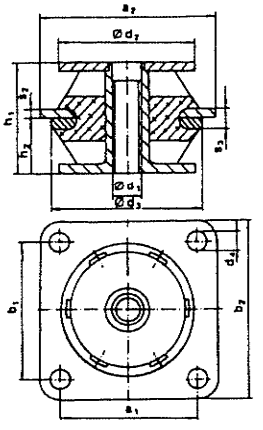

FIG 6

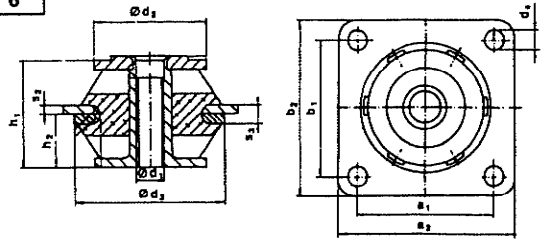

FIG 7

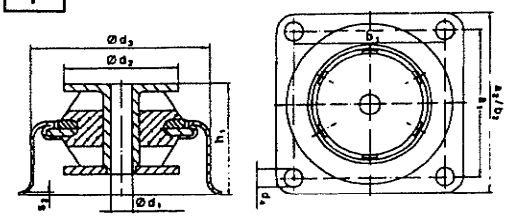

Air Spring

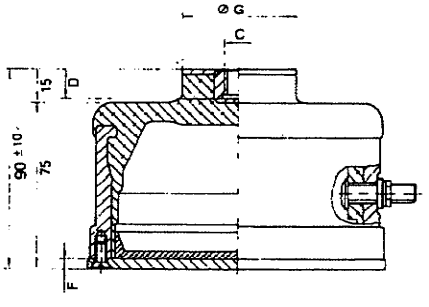

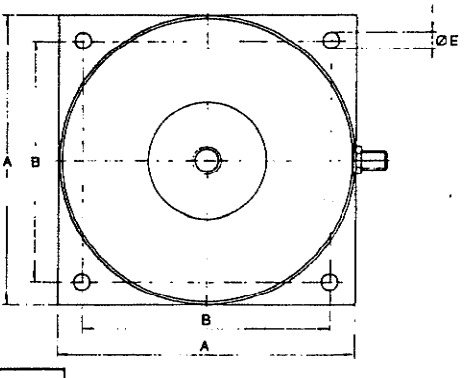

Dimension:								
Art. No.	DR. NO.	A	B	C	D	E	F	G
106 001	76 130 001	130	108	M 12	12	7	5	50
106 002	76 255 001	255	215	M 16	16	14	6	125
106 003	76 470 001	470	406	M 24 × 1,5	24	20	8	300
106 005[1)]	76 170 001	170	150	M 12	12	7	6	90
106 006[1)]	76 330 001	330	280	M 16	16	14	8	216

Rail Bar Type A

MEGA-T

Article No.	B mm	H mm	L mm
800 001	20	30	2000
800 002	25	25	2000
800 003	25	30	2000
800 004	30	25	2000
800 005	30	30	2000
800 006	40	20	2000
800 007	40	35	2000
800 008	40	40	2000
800 009	40	45	2000
800 010	50	35	2000
800 011	50	40	2000
800 012	50	45	2000
800 013	50	50	2000
800 014	50	55	2000
800 015	50	60	2000
800 016	50	70	2000
800 017	60	30	2000
800 018	60	35	2000
800 019	60	40	2000
800 020	60	50	2000
800 021	60	60	2000
800 022	60	80	2000
800 023	70	30	2000
800 024	70	40	2000
800 025	70	45	2000
800 026	70	50	2000
800 027	70	55	2000
800 028	70	60	2000
800 029	70	70	2000
800 030	70	80	2000
800 031	80	45	2000
800 032	80	60	2000
800 033	80	80	2000
800 034	90	45	2000
800 035	100	20	2000
800 036	100	30	2000
800 037	100	40	2000
800 038	100	45	2000
800 039	100	50	2000
800 040	100	55	2000
800 041	100	60	2000
800 042	100	65	2000
800 043	100	70	2000
800 044	100	80	2000

Article No.	B mm	H mm	L mm
800 045	120	45	2000
800 046	120	50	2000
800 047	120	60	2000
800 048	120	70	2000
800 049	120	80	2000
800 050	150	50	2000
800 051	150	60	2000
800 052	150	65	2000
800 053	150	70	2000
800 054	150	80	2000
800 055	150	100	2000
800 056	200	80	2000
800 057	200	100	2000
800 058	250	100	2000
800 059	300	100	2000
800 060	400	100	2000

Elastomer: Natural Rubber
soft = 40 ± 5 Shore A
medium = 55 ± 5 Shore A
hard = 70 ± 5 Shore A

metal parts ST 37

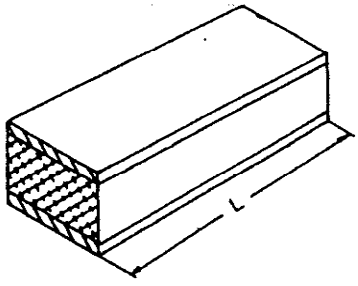

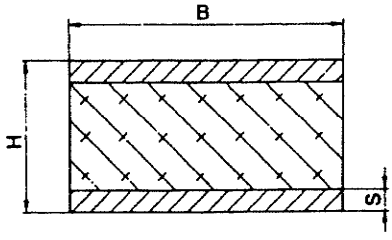

Rail Bar Type A

MEGA-T

Article No.	B mm	H mm	L mm
850 001	20	30	2000
850 002	25	25	2000
850 003	25	30	2000
850 004	30	25	2000
850 005	30	30	2000
850 006	40	20	2000
850 007	40	35	2000
850 008	40	40	2000
850 009	40	45	2000
850 010	50	35	2000
850 011	50	40	2000
850 012	50	45	2000
850 013	50	50	2000
850 014	50	55	2000
850 015	50	60	2000
850 016	50	70	2000
850 017	60	30	2000
850 018	60	35	2000
850 019	60	40	2000
850 020	60	50	2000
850 021	60	60	2000
850 022	60	80	2000
850 023	70	30	2000
850 024	70	40	2000
850 025	70	45	2000
850 026	70	50	2000
850 027	70	55	2000
850 028	70	60	2000
850 029	70	70	2000
850 030	70	80	2000
850 031	80	45	2000
850 032	80	60	2000
850 033	80	80	2000
850 034	90	45	2000
850 035	100	20	2000
850 036	100	30	2000
850 037	100	40	2000
850 038	100	45	2000
850 039	100	50	2000
850 040	100	55	2000
850 041	100	60	2000
850 042	100	65	2000
850 043	100	70	2000
850 044	100	80	2000

Article No.	B mm	H mm	L mm
850 045	120	45	2000
850 046	120	50	2000
850 047	120	60	2000
850 048	120	70	2000
850 049	120	80	2000
850 050	150	50	2000
850 051	150	60	2000
850 052	150	65	2000
850 053	150	70	2000
850 054	150	80	2000
850 055	150	100	2000
850 056	200	80	2000
850 057	200	100	2000
850 058	250	100	2000
850 059	300	100	2000
850 060	400	100	2000

Elastomer: Natural Rubber
soft = 40 ± 5 Shore A
medium = 55 ± 5 Shore A
hard = 70 ± 5 Shore A

metal parts ST 37-2

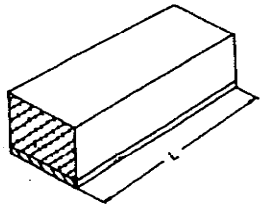

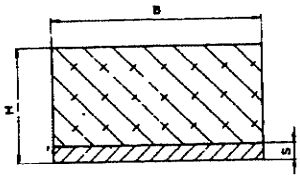

Rail Bar Type AII / FII

MEGA-T

Article No.	B mm	H mm	L mm	s mm	s_1 mm
810 001	50	35	2000	10	5
810 002	50	40	2000	10	5
810 003	50	45	2000	10	5
810 004	50	50	2000	10	5
810 005	50	55	2000	10	5
810 006	50	60	2000	10	5
810 007	50	70	2000	10	5
810 008	60	35	2000	11	5
810 009	60	60	2000	11	5
810 010	70	30	2000	12	5
810 011	70	45	2000	12	5
810 012	70	55	2000	12	5
810 013	70	60	2000	12	5
810 014	70	70	2000	12	5
810 015	70	80	2000	12	5
810 016	100	40	2000	15	5
810 017	100	45	2000	15	5
810 018	100	50	2000	15	5
810 019	100	55	2000	15	5
810 020	100	60	2000	15	5
810 021	100	70	2000	15	5
810 022	100	80	2000	15	5

Type AII

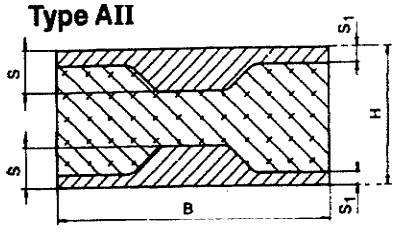

Type FII

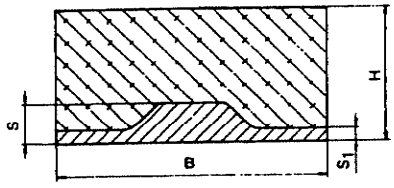

Metal parts: ST 37-2

U-Rail

MEGA-T

Article No.	B mm	H mm	L mm
860001	113	35	2000

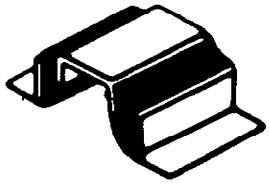

Elastomer: Natural Rubber
soft = 40 ± 5 Shore A
medium = 55 ± 5 Shore A
hard = 70 ± 5 Shore A

Metal parts: ST 37-2

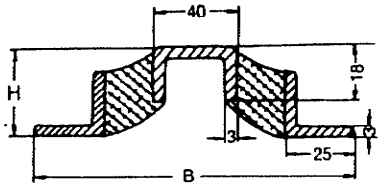

Rail Bar Type B

Article No.	L mm	H mm	B mm	B_1 mm	s mm	Fig
821 001	100	45	283	200	5	1
822 001	100	45	283	200	5	2

FIG 1

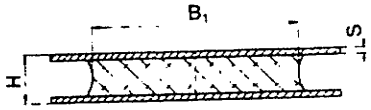

FIG 2

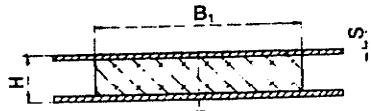

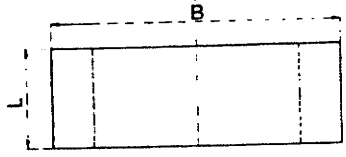

Rail Bar Type C

Article No.	B mm	B_1 mm	H mm	L mm	s mm	s_1 mm	Fig
831 001	200	150	40	50	8	12	3
832 001	470	230	60	100	15	15	3

FIG 3

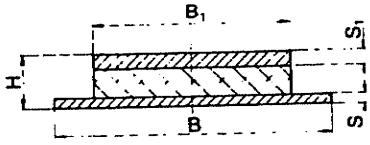

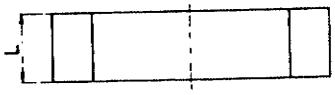

Rail Bar Type D

Article No.	B mm	B_1 mm	H mm	L mm	s mm	Fig
840 001	130	70	35	50	5	4
842 002	300	200	80	150	15	4

FIG 4

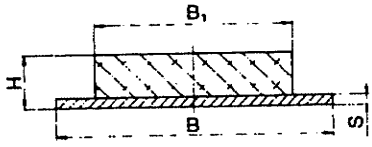

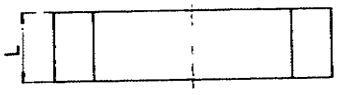

Buffer Type K/D

MEGA-T

Article No.	D mm	H mm	STOCK Thread M: G × L (mm)
			0
551 001	25	17	6 × 18
551 002	40	28	
551 003	40	53	
551 004	50	18	10 × 28
551 005	50	21	
551 006	50	22,5	
551 007	50	30	
551 008	50	35	
551 009	50	39	10 × 28*
551 010	60	22	
551 011	75	25	
551 012	75	28	
551 013	80	30**	12 × 32
551 014	80	60	
551 015	125	45	16 × 45
551 016	125	80	
551 017	125	90	

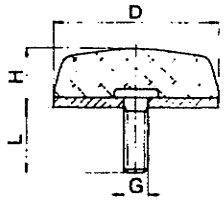

Buffer Type KP/D

Article No.	D mm	H mm	STOCK Thread M: G × L (mm)
552008	21	24	6 X 15
552102	30	50	8 X 20
552 001	30	36	8 × 20*
552 002	50	58	10 × 28*
552 003	50	61	
552 004	50	68	8 × 36*
552 005	75	89	
552 006	115	133	16 × 45*

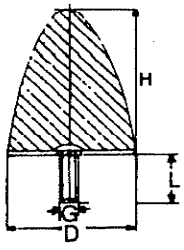

Elastomer: Natural Rubber
soft = 40 ± 5 Shore A
medium = 55 ± 5 Shore A
hard = 70 ± 5 Shore A

Crain Buffer A

MEGA-T

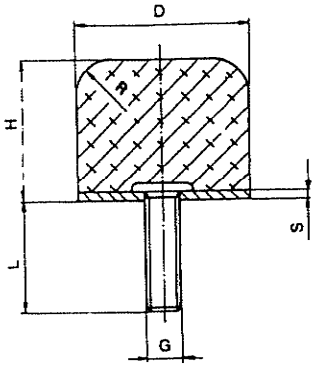

Article No.	D	H	G	L	R	S
551900	40	34	M 8	28	8	2
551901	50	42	M 10	32	10	2
551902	63	53	M 10	32	12,5	3
551903	80	66	M 12	37	16	3
551904	100	84	M 12	36	20	4
551905	125	104	M 16	46	25	4
551906	160	131	M 16	44	32	6
551907	200	166	M 20	49	40	6
551908	250	208	M 20	47	50	8

Metal parts: ST 37

Elastomer: Natural Rubber

Natural Rubber = 60 ± 5 Shore A

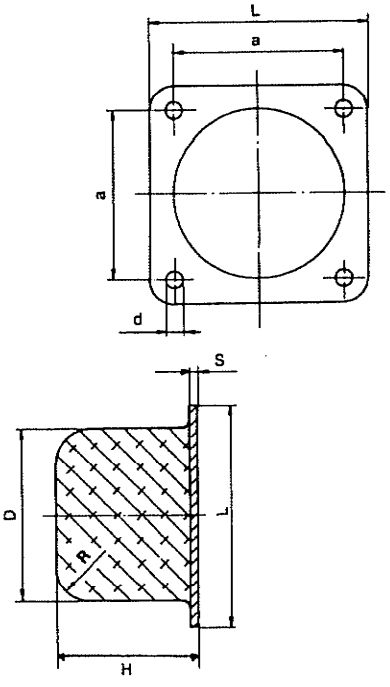

Crain Buffer B

Article No.	D	H	L	a	d	R	S
554901	40	34	50	40	5,5	8	2
554902	50	42	63	50	6,5	10	2
554903	63	53	80	63	6,5	12,5	3
554904	80	66	100	80	9	16	3
554905	100	84	125	100	9	20	4
554906	125	104	160	125	11	25	4
554907	160	131	200	160	11	32	6
554908	200	166	250	200	13	40	6
554909	250	208	315	250	13	50	8

U-Lager

MEGA-T

Article No.	B mm	H mm	L mm
140 001	20	50	90
140 002	25	62	71
140 003	40	50	90
140 004	50	78	79
140 005	65	108	87
140 006	80	130	100

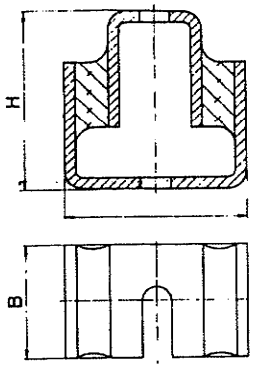

Art.-Nr. 140 002
Art.-Nr. 140 004
Art.-Nr. 140 005
Art.-Nr. 140 006

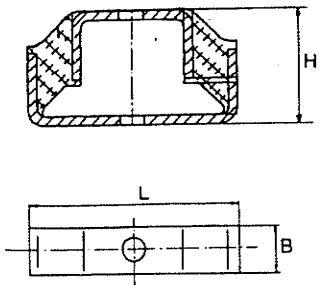

Art.-Nr. 140 001
Art.-Nr. 140 003

Elastomer:
Natural Rubber

40 ± 5 Shore A
50 ± 5 Shore A
60 ± 5 Shore A
70 ± 5 Shore A

Article No.	Type	b mm
721 001	W	25
722 001	V	25
723 001	X	12
724 001	Y	25
724 002		40
725 001	Z	25
725 002		40

Elastomer: Natural Rubber
soft = 40 ± 5 Shore A
medium = 55 ± 5 Shore A
hard = 70 ± 5 Shore A

Metal parts: ST 37

W

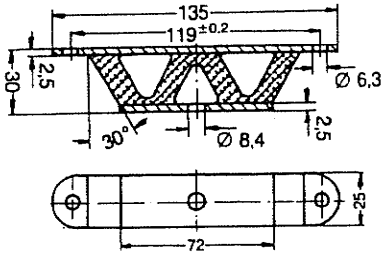

V

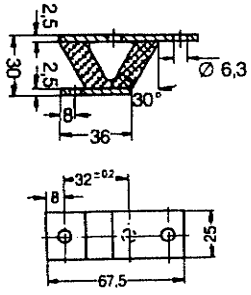

X

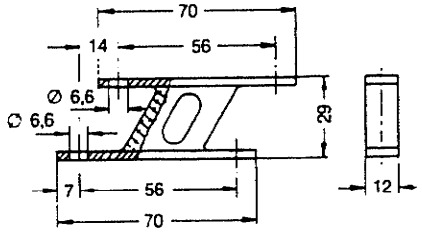

Y

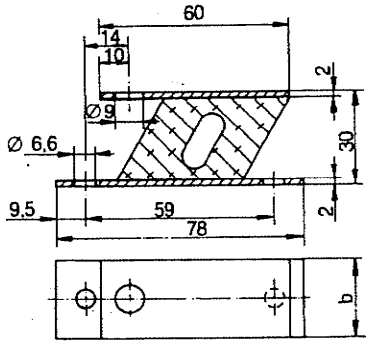

Z

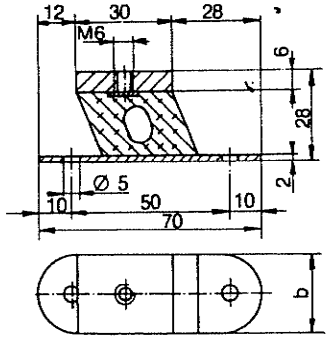

FL MOUNTS

MEGA-T

PART No.	DIAMETER-D (m-m)	DIAMETER-D (m-m)	HIGHT (m-m)	pic
77 - FL - 00 33	45	16	22.5	1
77 - FL - 00 29	30	9	12	2
77 - FL - 00 28	66	12.5	30	3

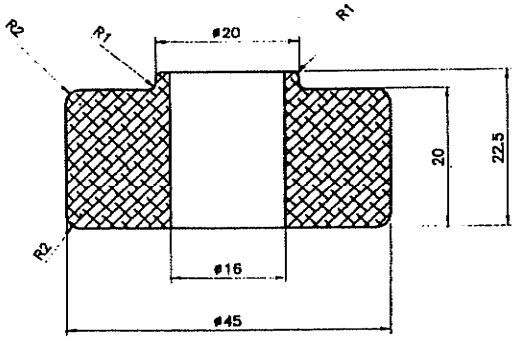

pic 1

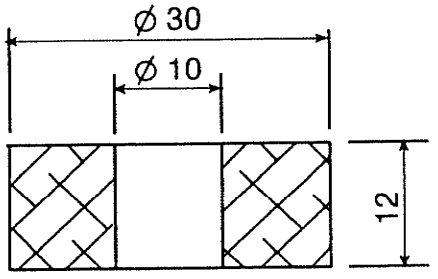

pic 2

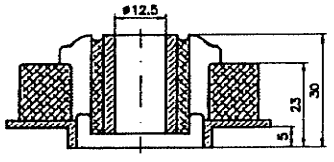

Material: Special compounds
process tolerances
comply with din 7715
class M3/c

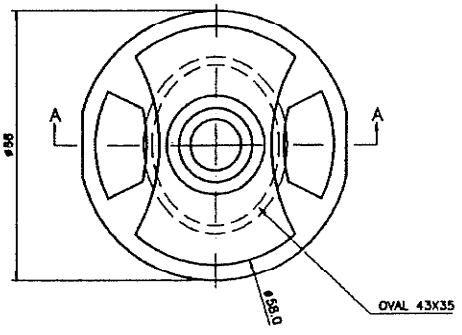

pic 3

RUBBER SPRINGS

MEGA-T

PART No.	DIAMETER-D (m-m)	HIGHT (m-m)	pic
7800012	46	58	1
7590050	96	92	2
7590051	116	99	3

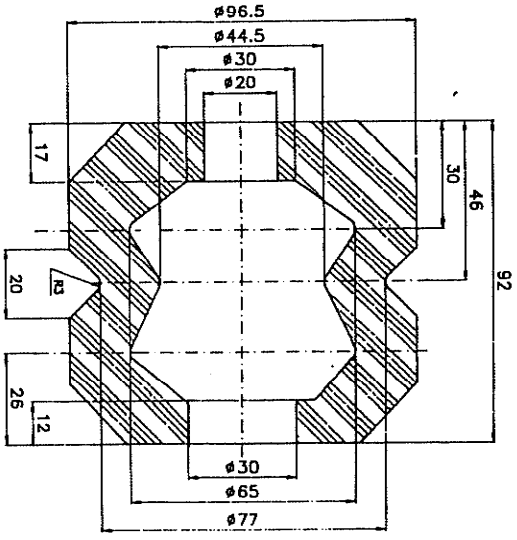

pic 2

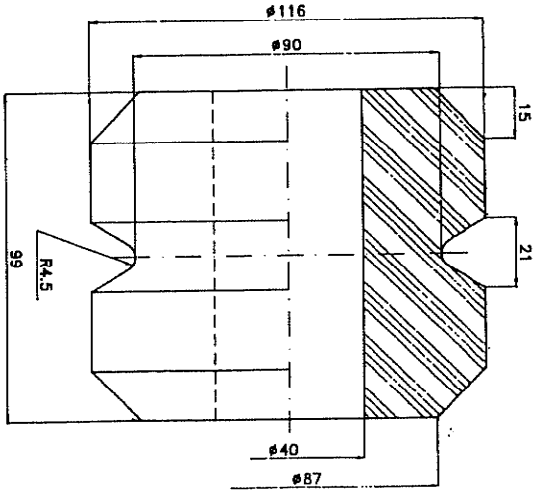

pic 3

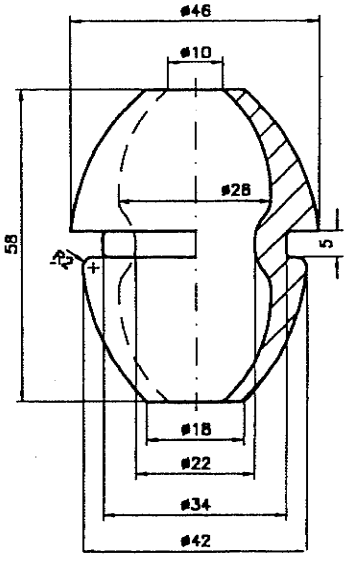

pic 1

SHEAR / COMPRESSION MOUNTS

MEGA-T

Article No.	Thread	DIAMETER (m-m)	HIGHT (m-m)	pic
77-5M-0031	1/2 NF x 26	115	57	1
77-L2-0021		166 x 166	63	2

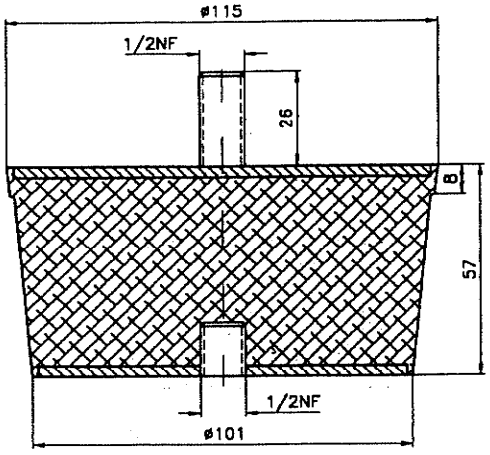

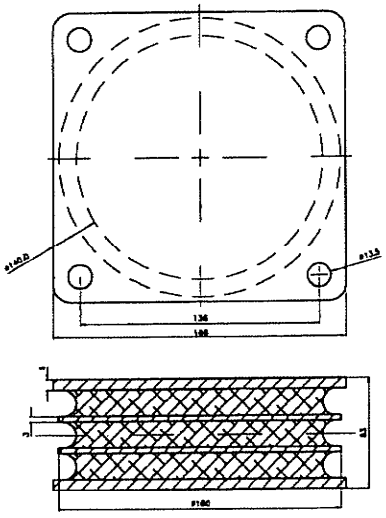

GENERATOR SET MOUNTS

MEGA-T

PART NAME	PART No.	DIAMETER (m-m)	HIGHT (m-m)	Thread	pic
GN 75x50	77-GN-0016	75	50	M12x37	1
GN 90x50	77-GN-0017	81	50	M12x37 OR M12	2
GN 125x64	77-GN-0018	125	64	M20	3

Material: OR compourd
Hardness: 55, 60, 80 ,Sh A
Available: special design for higher shiftness (with metal inter sleaves)

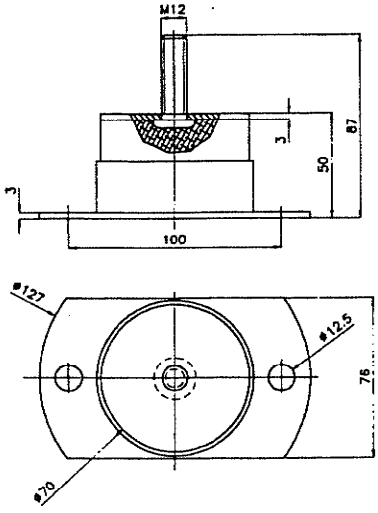

pic 1

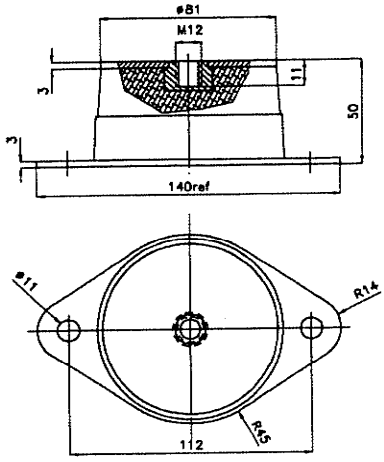

pic 2

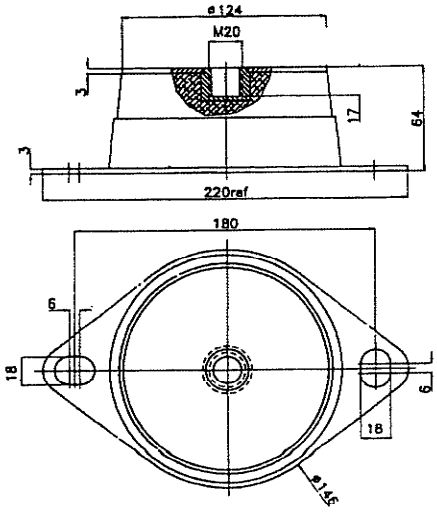

pic 3

Material: Special compounds process tolerances comply with din 7715 class M3/c

SCALE AND HOUSING MOUNTS

MEGA-T

PART NAME	PART No.	DIAMETER Dl (m-m) BXB (m-m)	HIGHT H(m-m)	pic
High load mount	77 SQ001	80	20	1
High load mount	77SQ006	120X120	67	2
High load mount	77SQ007	150X100	50	2
Sp. Feet	77SW0025	56	23	3
Sp. Feet	77SW026	90	30	3
Sp. Feet	77SW0034	35	8.5	4
BELL MOUNT	77SW0035	60	20	5
MTK 40X12	77MT0022	40	12	6
CF 22X20	7525035	20	22	7

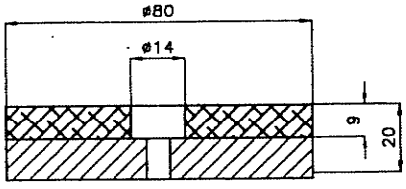

pic 1

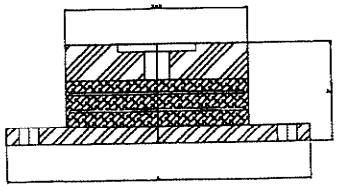

pic 2

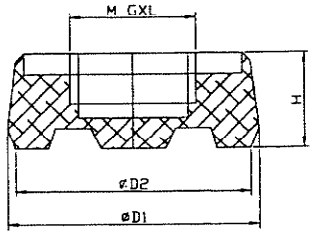

pic 3

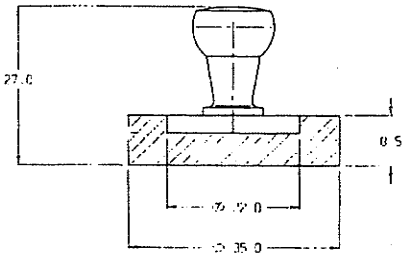

pic 4

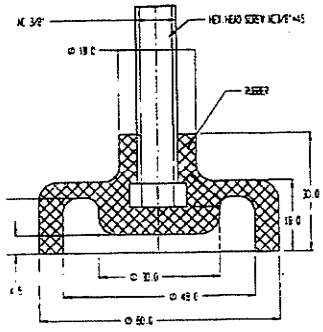

pic 5

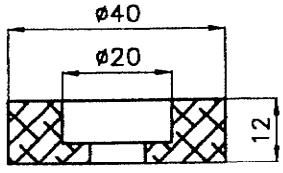

pic 6

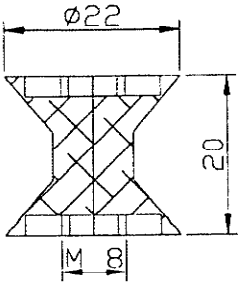

pic 7

SPECIAL MOUNTS

MEGA-T

PART NAME	PART No.	DIAMETER (m-m)	HIGHT (m-m)	pic
MP MOUNT	77MP0014	50	25.5	1
SQ MOUNT	SQ130X80	130X80	39	2
KS/A 64X28	77MZ0027	64/54	29	3

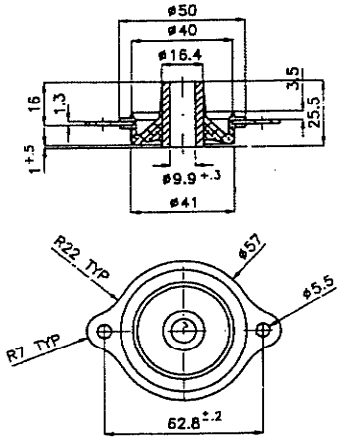

pic 1

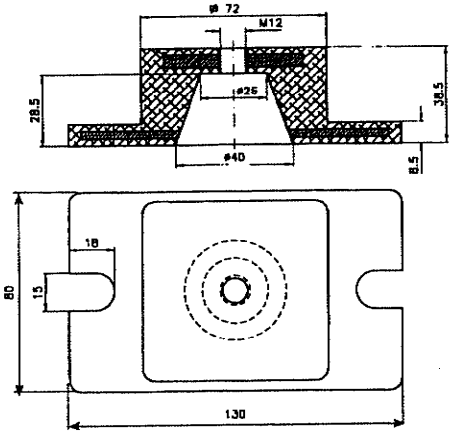

pic 2

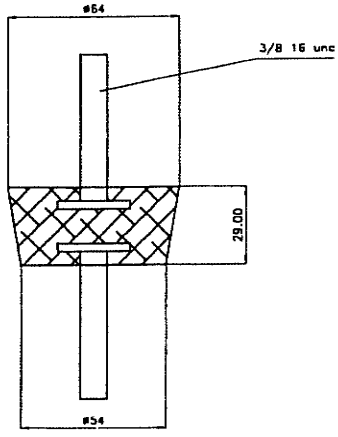

pic 3

CONSTRACTION MOUNTS

Heavy Duty Mounts

PART NAME	PART No.	DIAMETER DIA (m-m)	HIGHT H (m-m)	pic
B/FS	27CM0001	165	75	1
B/FS	77CM0002	100	55	1
HOOK DAMPER	77HD0037	150X110	60	3
SQWARE MOUNT	77000002	80X80	8	4

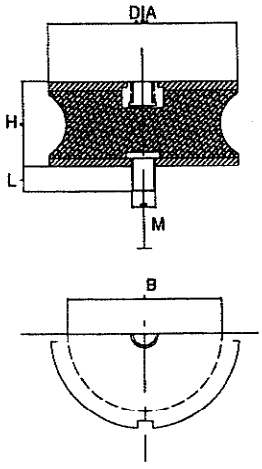

pic 1

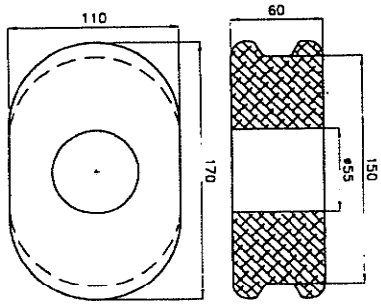

pic 3

Material: Special compounds process tolerances comply with din 7715 class M3/c

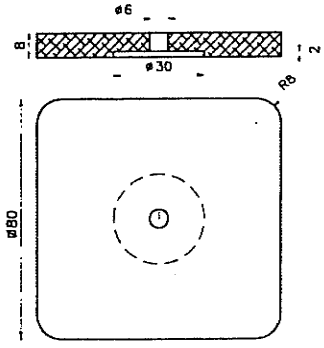

pic 4

HM - SERIES MOUNT

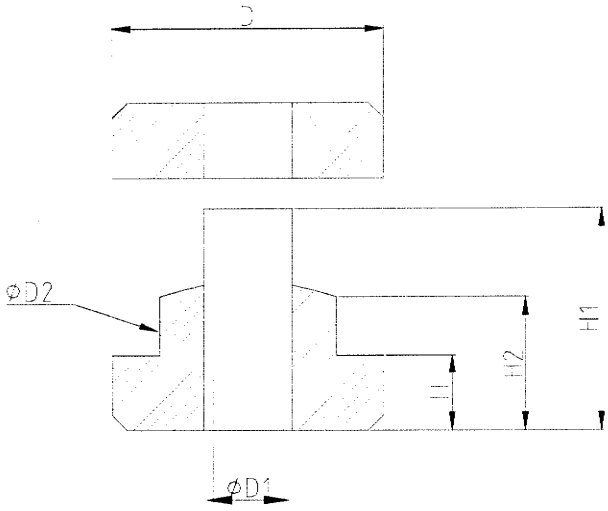

PART NO.	D	H	H1	H2	D1	D2	LOAD(KG) 43 SH.A	LOAD (KG) 65 SH.A
HM 004	33	12.3	31.8	21.8	10	20	15	25
HM 001	47	20	50	30	13	32	75	130
HM 002	64	23	62	37	17	40	125	250
HM 003	89	25	73	44	23	58	250	450
HM 005	64	23	62	37	23	40	125	250

APPLICATIONS:

OFF THE ROAD VEHICLES
CONSTRUCTION EQUIPMENT
VEHICLE CABS
AGRICULTURAL VEHICLES
MOBILE MACHINERY
MILITARY APPLICATIONS

NATURAL FREQUENCY HZ	10-22
RUBBER QUALITY	NEOPRENE (CR)
METAL QUALITY	STEEL
OPERATING TEMPERATURE °C	-30 TO 100

MEGA - T

AS 75X35 MOUNT

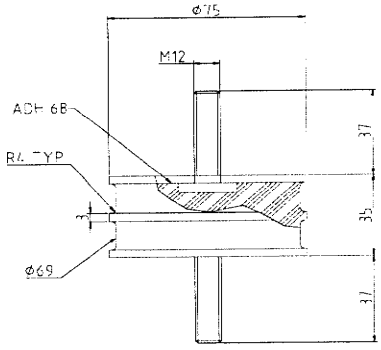

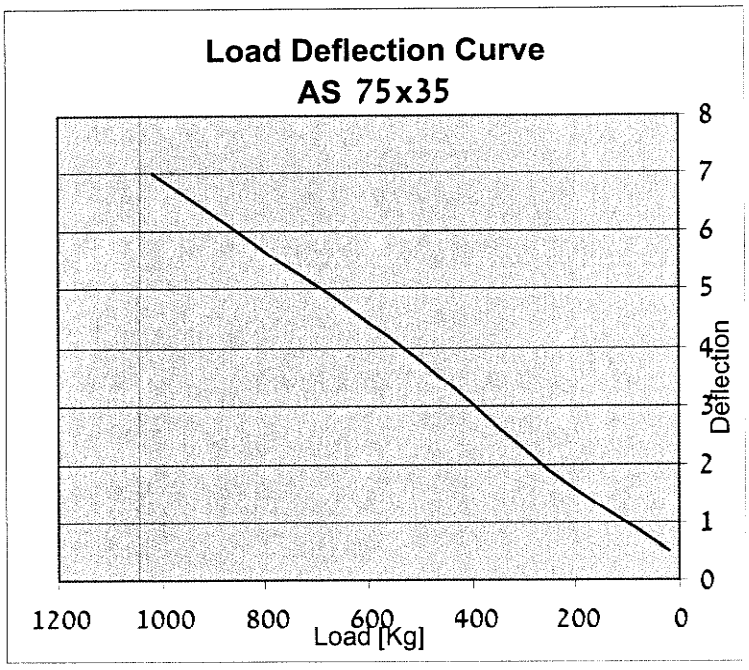

איור 1

APPLICATIONS:

OFF THE ROAD VEHICLES
CONSTRUCTION EQUIPMENT
AGRICULTURAL VEHICLES

NATURAL FREQUENCY HZ	5
RUBBER QUALITY	NR
METAL QUALITY	STEEL
OPERATING TEMPERATURE °C	-30 TO 80

MEGA – T

SOLID INDUSTRIAL TYRES
& TECHNICAL PARTS

HT- SERIES MOUNTS

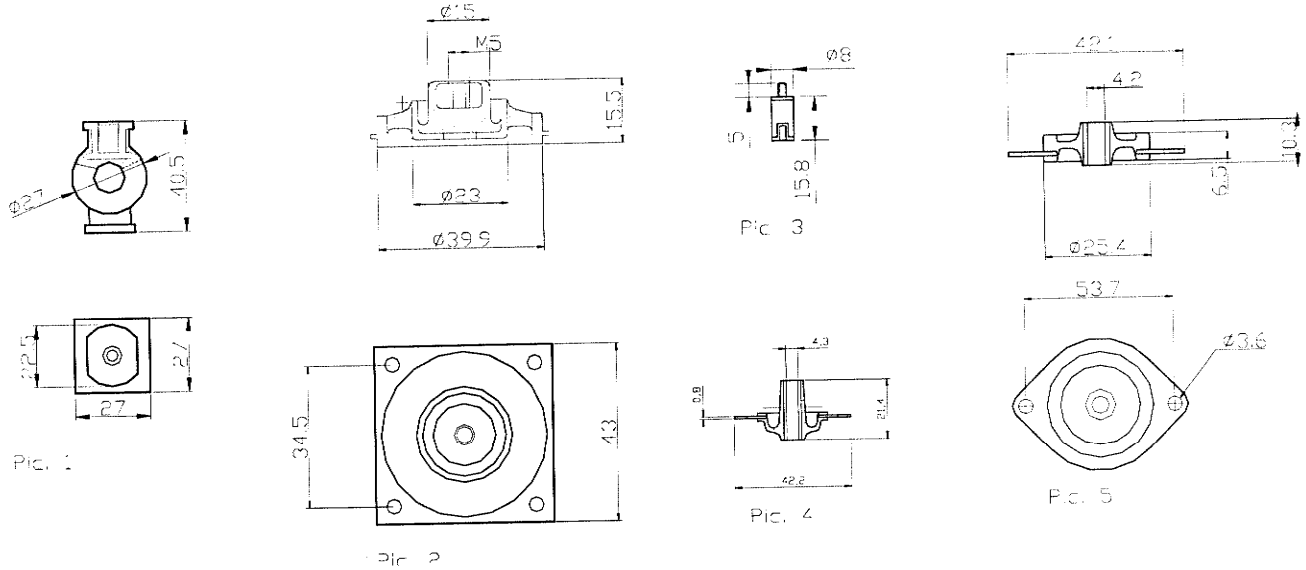

PICTURE	PART NAME	H MM	D MM	PART NUMBER
Pic. 1	Hose mount	18	12	77-HT-0004-NA
Pic. 2	LMr 003	15.5	43x43	77-HT-0009-AG
Pic. 3	B8x15IIR	15.5	8	77-HT-0001-DD
Pic. 4	MP MOUNT	21.4	42.2	77-HT-ZM0100
Pic. 5	MP MOUNT	10.3	42.1	77-HT-ZM0200

APPLICATIONS AND FEATURES

Electronic equipment
Military application
Sensitive instruments
Medical equipment
Low to medium frequency
Low to medium weight
Rubber quality: Natural Rubber, Silicone, Hi Damp elastomer, Oil resistance elastomer

Custom made Mounts

Part Name	Part No.	Elastomer	Picture
Multi Spring	ZM-0001	IIR	1
Sol 165x71	77-ZM-001-02	NR	2
U 260X54X20	77-VL-1001-01	NR	3
Trapez Foot	77-MT-0021-NA	NR	4
MPX157X88	77-MP-0015-CM	CR	5
CAM 134x57	ZM-0008	CR	6
CF 60x45	ZM-0007	NR	7

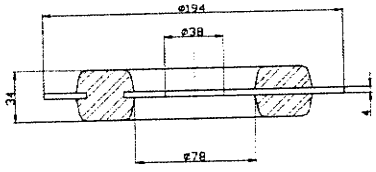

pic 1

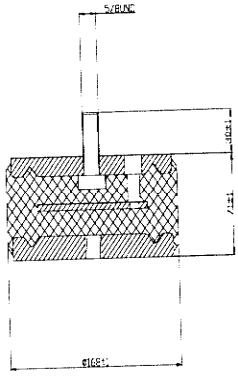

pic 2

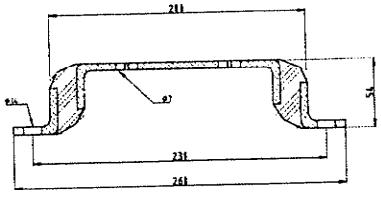

pic 3

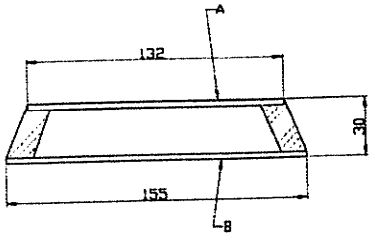

pic 4

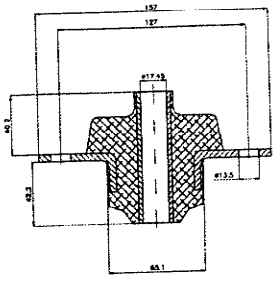

pic 5

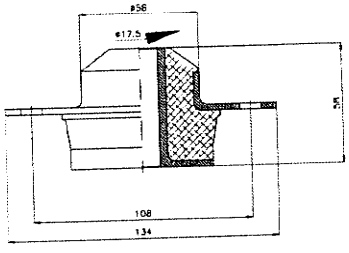

pic 6